Record-Replay Architecture as a General Security Framework

Yasser Shalabi[1], Mengjia Yan[1], Nima Honarmand[2], Ruby B. Lee[3], and Josep Torrellas[1]

[1]University of Illinois at Urbana-Champaign

[2]Stony-Brook University

[3]Princeton University

i-acoma group

HPCA 2018

ILLINOIS
UNIVERSITY OF ILLINOIS AT URBANA-CHAMPAIGN

Motivation

- Security continues to grow in importance
  - More impact 
- Cost-effective complete defenses
- Attackers continuously evolving to bypass defenses
  - Flexibility in defenses would be useful

i-acoma group

ILLINOIS
UNIVERSITY OF ILLINOIS AT URBANA-CHAMPAIGN

Example

- Stack-Overflow and Stack Smashing
  - Stack-Overflow allows rewriting stack
  - Stack Smashing was the initial technique, where malware injected onto stack executed there

Example

```
6157FF800FF0ABDDEC39
38EBF0FAB0AC81778015
F0C61C3FF800FF0ABDDC
37938EBF0FAB0AC817780
15FC36157FF800FF0ABD
DEE7938EC30FAB0AC815
F0C657FFEE7C38EF0C61
57FF800F038EBAC817780
15F0C6157FF800C3DEE7
938AC36157FF800FF0AB
DDEE7938EC30FAB0AC81
5F0C657FFEE7C38EF0C6
157FF800F03C36157FF80
0FF0ABDDEE7938EC30FA
B0AC815F0C657FFEE7
```

Application Binary

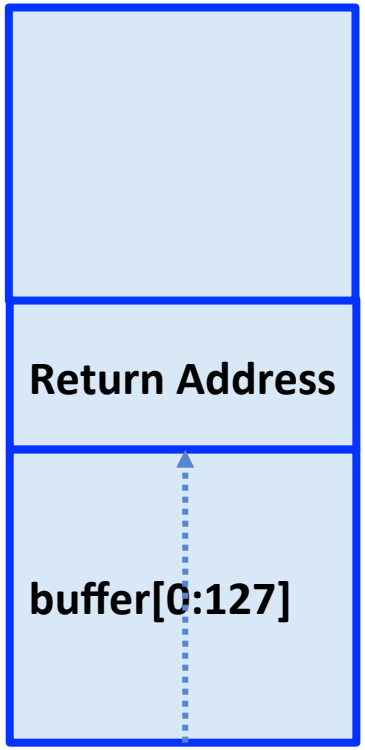

Application Stack

```
void vulnerable(char * str)
    char buffer[128];
    //Buffer overflow!
    strcpy(array, str);
    return;
```

i-acoma group

ILLINOIS
UNIVERSITY OF ILLINOIS AT URBANA-CHAMPAIGN

Example

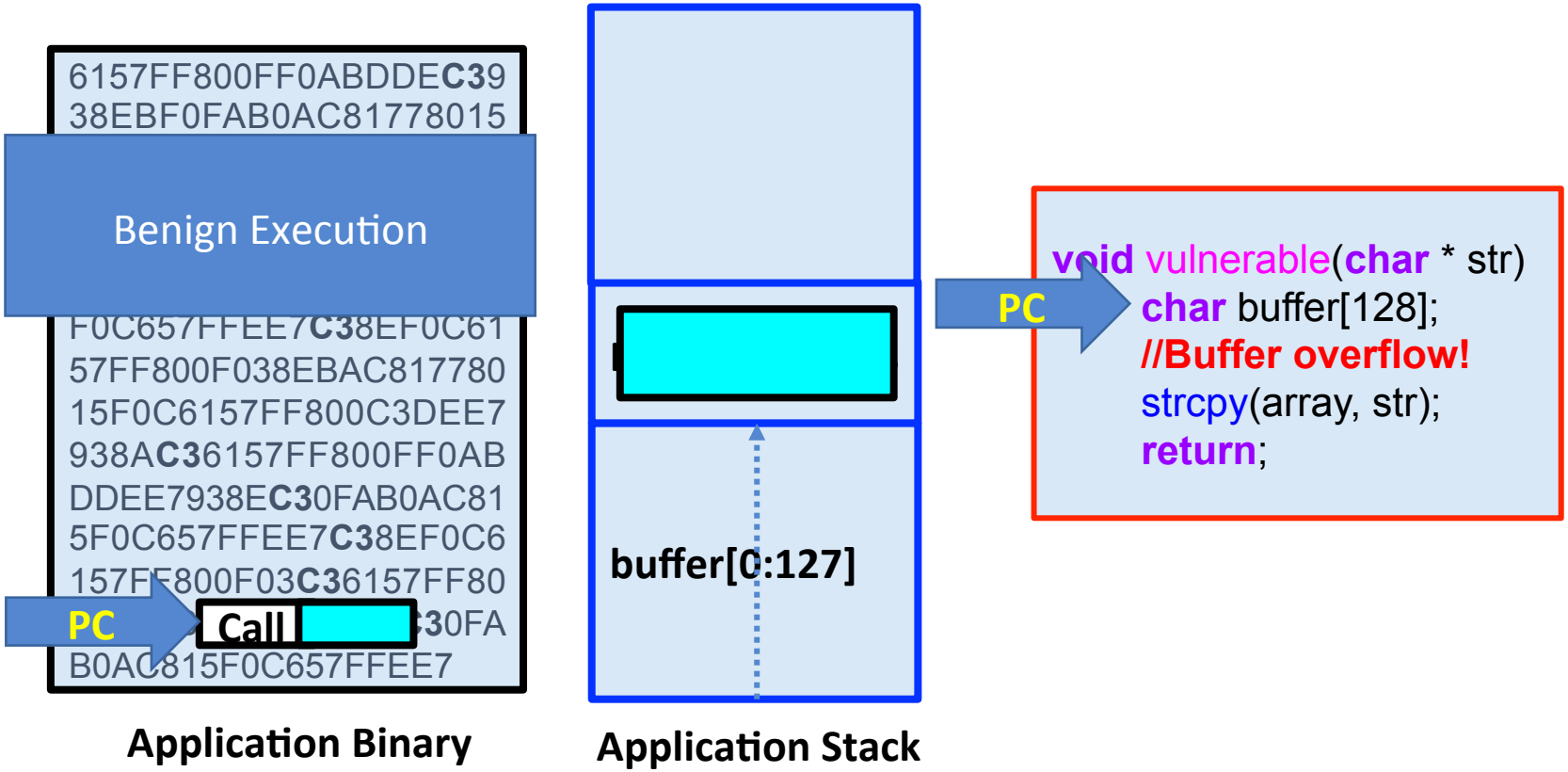

i-acoma group

ILLINOIS
UNIVERSITY OF ILLINOIS AT URBANA-CHAMPAIGN

Example

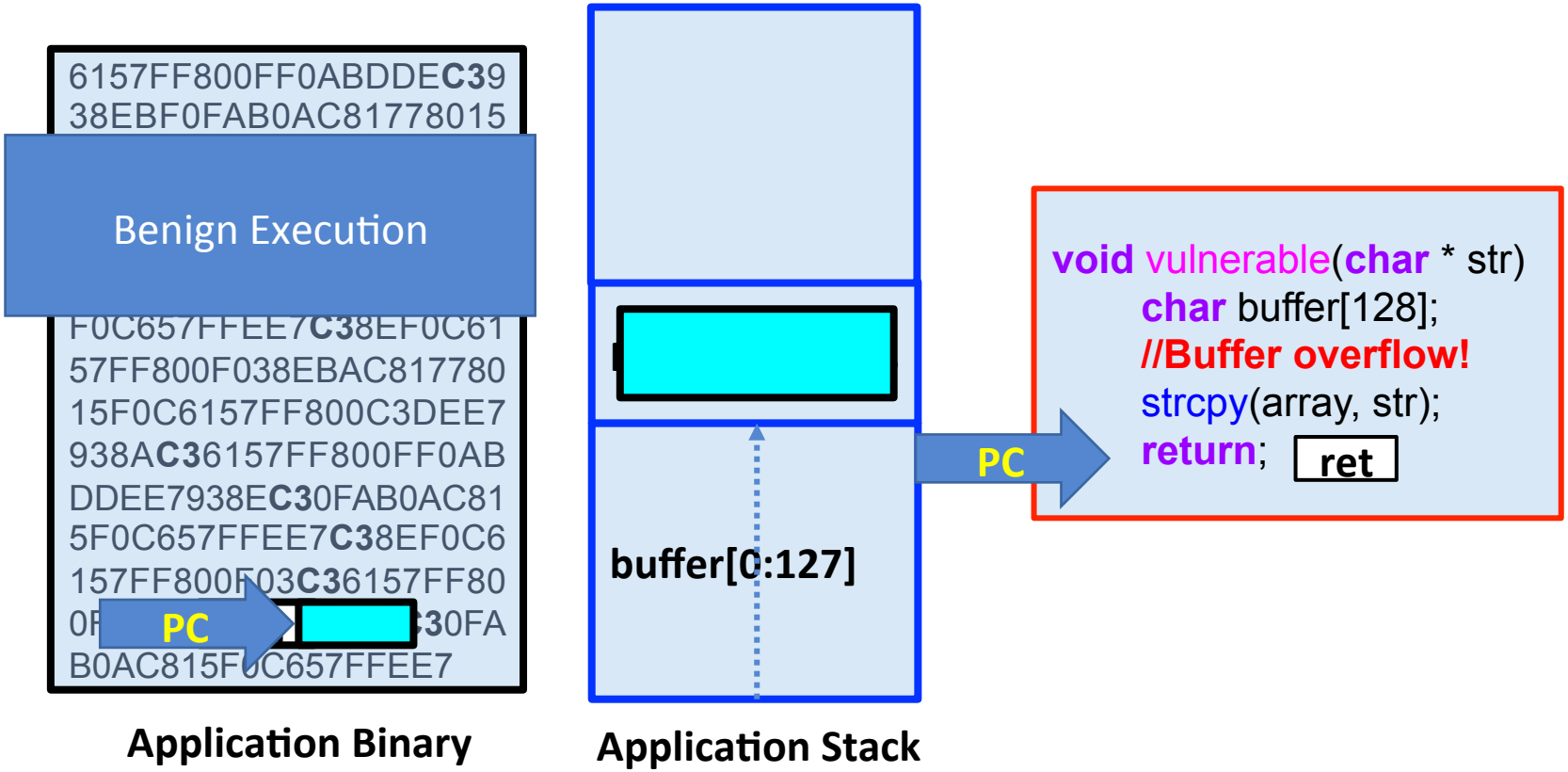

i-acoma group

ILLINOIS
UNIVERSITY OF ILLINOIS AT URBANA-CHAMPAIGN

Example

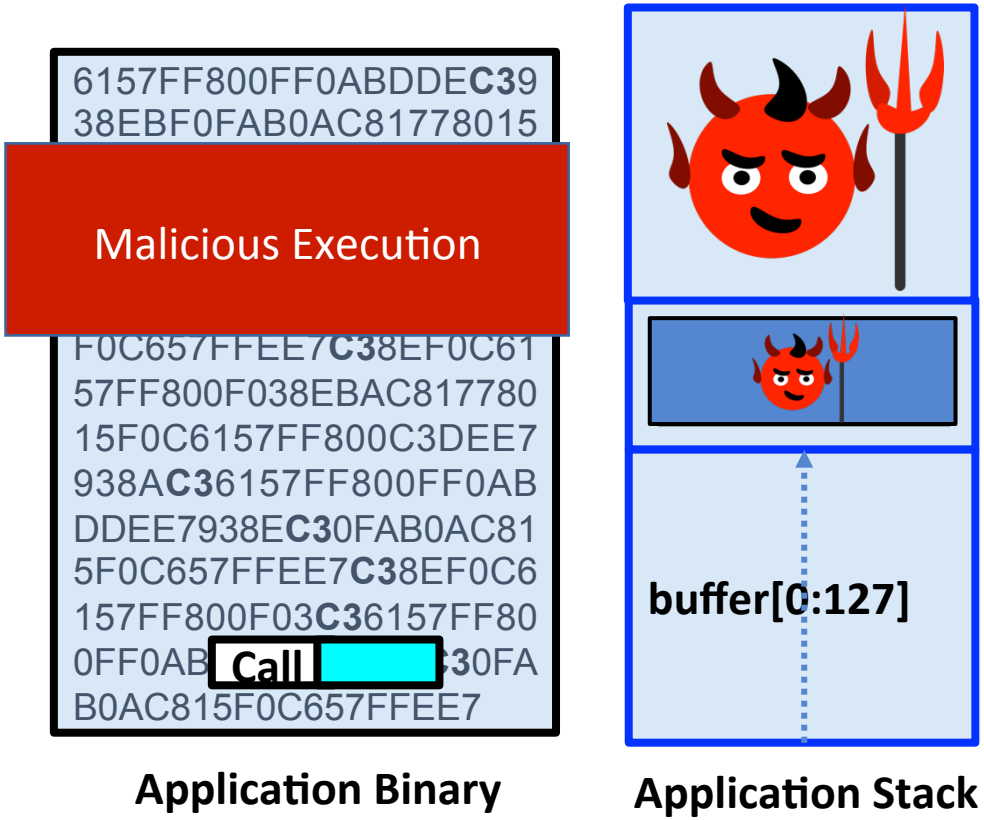

Application Binary **Application Stack**

```
void vulnerable(char * str)
    char buffer[128];
    //Buffer overflow!
    strcpy(array, str);
    return;  ret
```

i-acoma group

ILLINOIS
UNIVERSITY OF ILLINOIS AT URBANA-CHAMPAIGN

Example

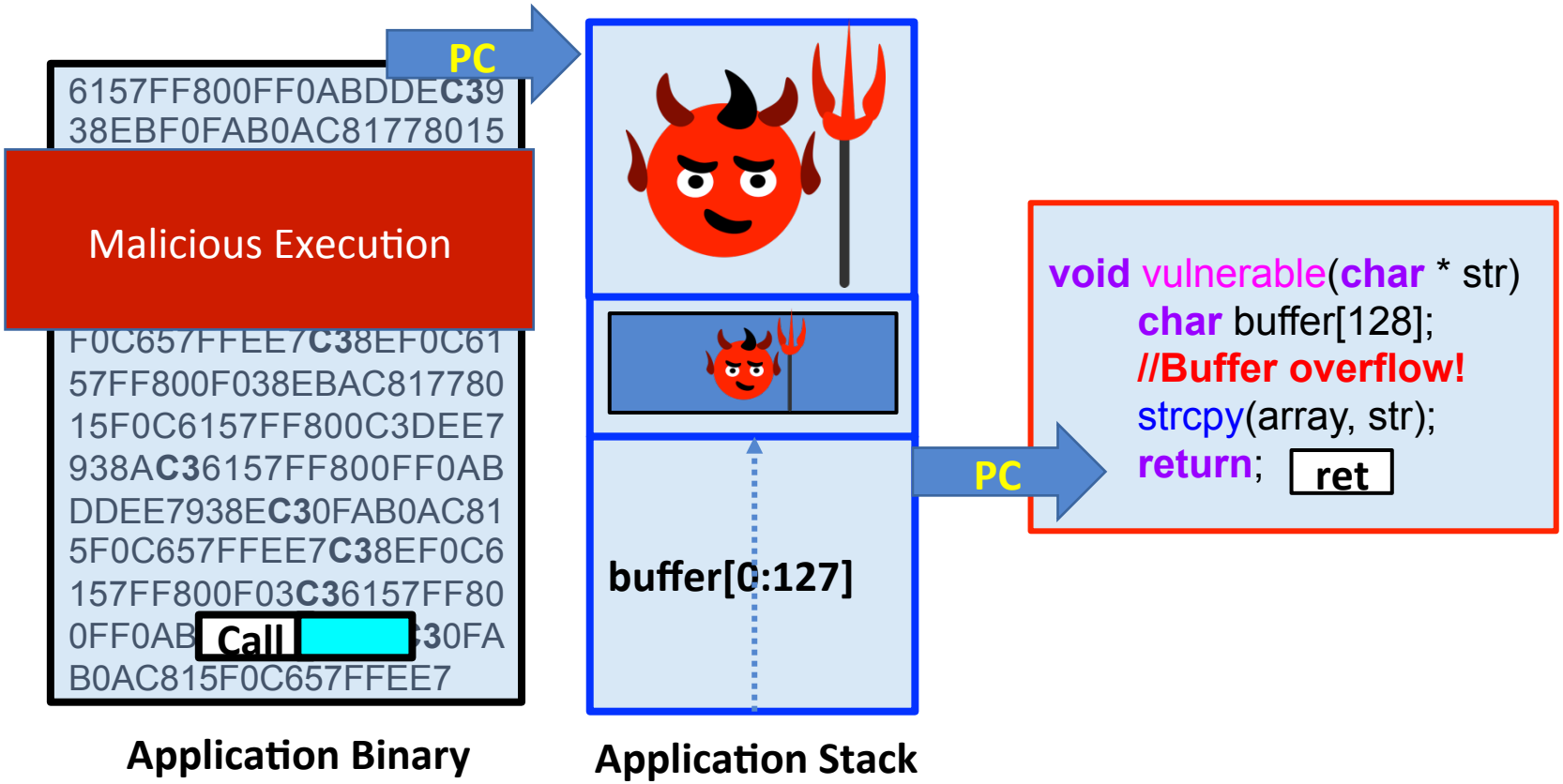

i-acoma group

ILLINOIS
UNIVERSITY OF ILLINOIS AT URBANA-CHAMPAIGN

Example

- Stack-Overflow and Stack Smashing
  - Stack-Overflow allows rewriting stack
  - Stack Smashing was the initial technique, where malware injected onto stack executed there
- Defenses Upper Hand: W^X -- “No eXecute”

Example

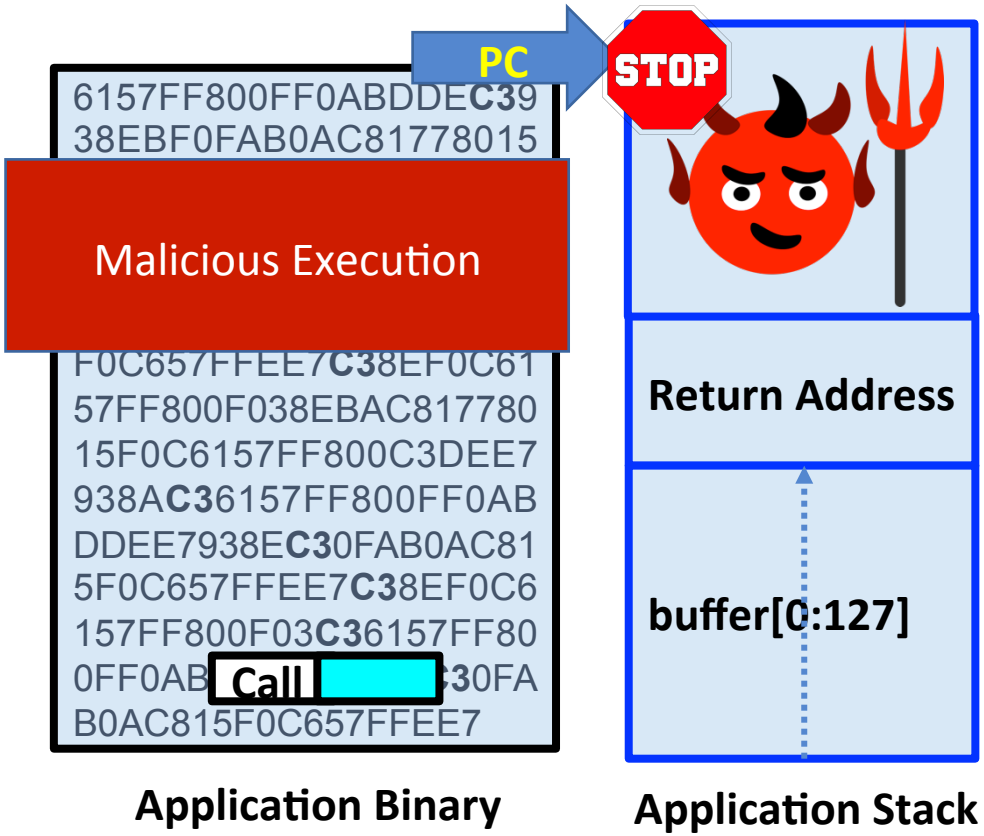


```
void vulnerable(char * str)
    char buffer[128];
    //Buffer overflow!
    strcpy(array, str);
    return;  ret
```

Example

- Stack-Smashing
  - Stack-Overflow allows rewriting stack
  - Initial attacks were to inject malware onto stack and redirect execution there
- Defenses Upper Hand: W^X -- “No eXecute”
- Code Reuse Attacks emerged to bypass
  - Return Oriented Programming used ret instructions
  - Allows indirect execution of the corrupted stack

Return Oriented Programming

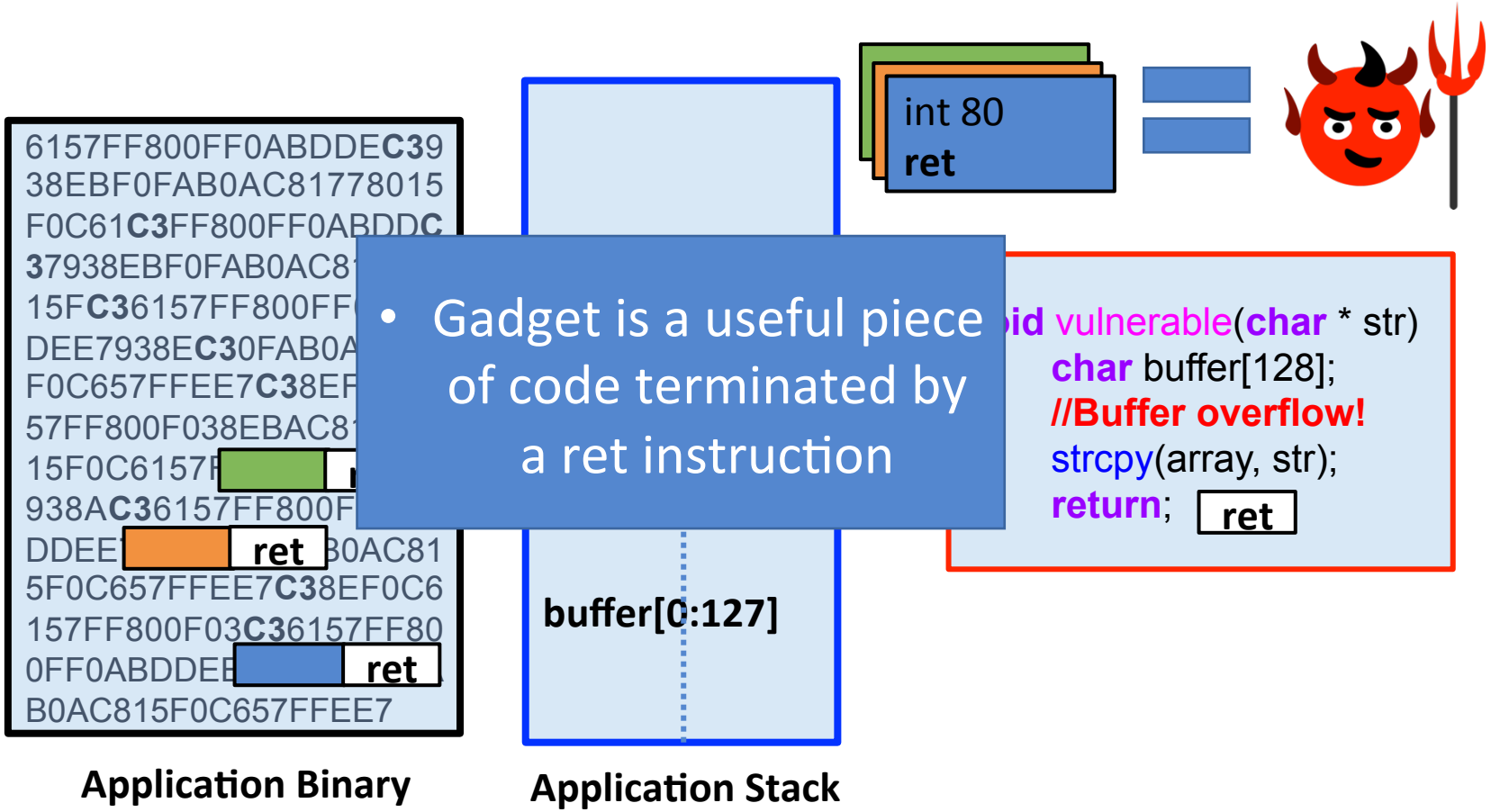

- Gadget is a useful piece of code terminated by a ret instruction

i-acoma group

ILLINOIS
UNIVERSITY OF ILLINOIS AT URBANA-CHAMPAIGN

Return Oriented Programming

Application Binary

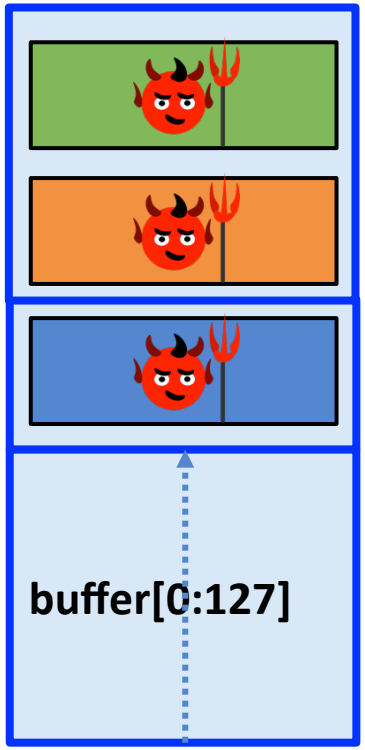

Application Stack

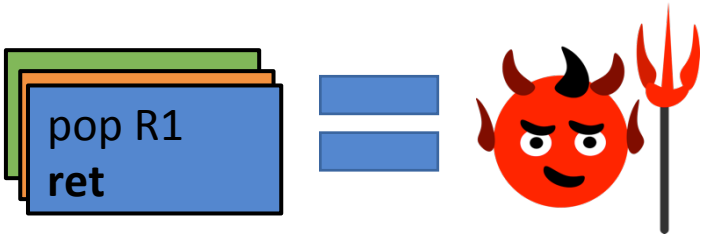


```
void vulnerable(char * str)
    char buffer[128];
    //Buffer overflow!
    strcpy(array, str);
    return;   ret
```

i-acoma group

ILLINOIS
UNIVERSITY OF ILLINOIS AT URBANA-CHAMPAIGN

Return Oriented Programming

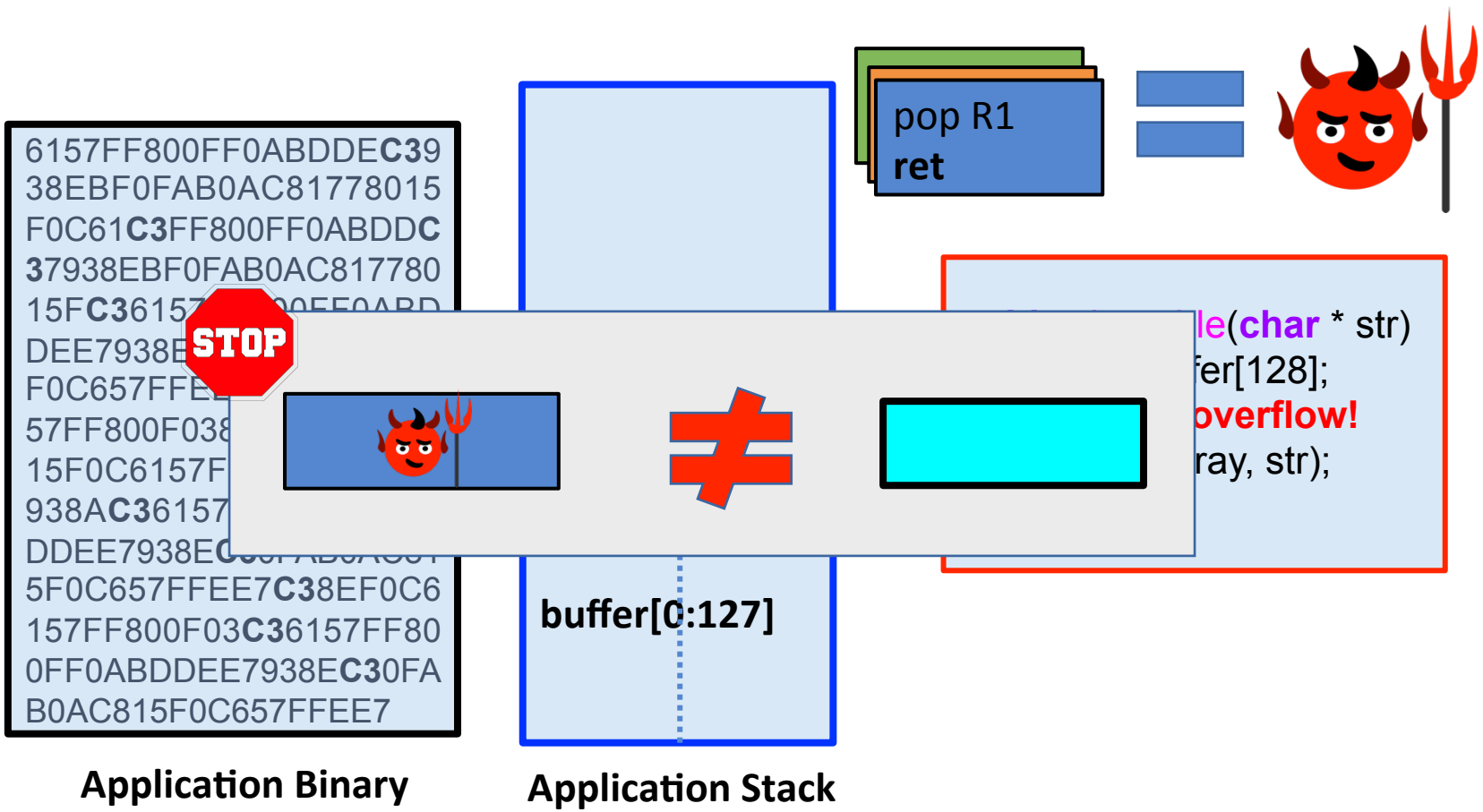

i-acoma group

ILLINOIS
UNIVERSITY OF ILLINOIS AT URBANA-CHAMPAIGN

Enter RnR

Record and Deterministic Replay (RnR)

- Technique for reproducing past executions faithfully
- As the program executes, it is recorded
  - Non-Deterministic (ND) events saved in a log
- In the replayed execution:
  - ND events trapped and reproduced using values from the logs
  - Deterministic events can be reproduced by re-execution

i-acoma group

ILLINOIS
UNIVERSITY OF ILLINOIS AT URBANA-CHAMPAIGN

Enter RnR-Safe

Our Proposal: RnR-Safe

- Use RnR for threat detection and attack verification
- **Recording Machine:** detect all threats and raise alarm
  - **IF** intrusion possible → raise alarm
  - Ok to have false positives!
- **Replay Machine:** investigate alarm and verify attack
  - Expensive software analysis to determine if an alarm is:
    - True intrusion
    - False alarm
  - Possible to further characterize intrusions

i-acoma group

ILLINOIS
UNIVERSITY OF ILLINOIS AT URBANA-CHAMPAIGN

Contribution: RnR as a Security Framework (RnR-Safe)

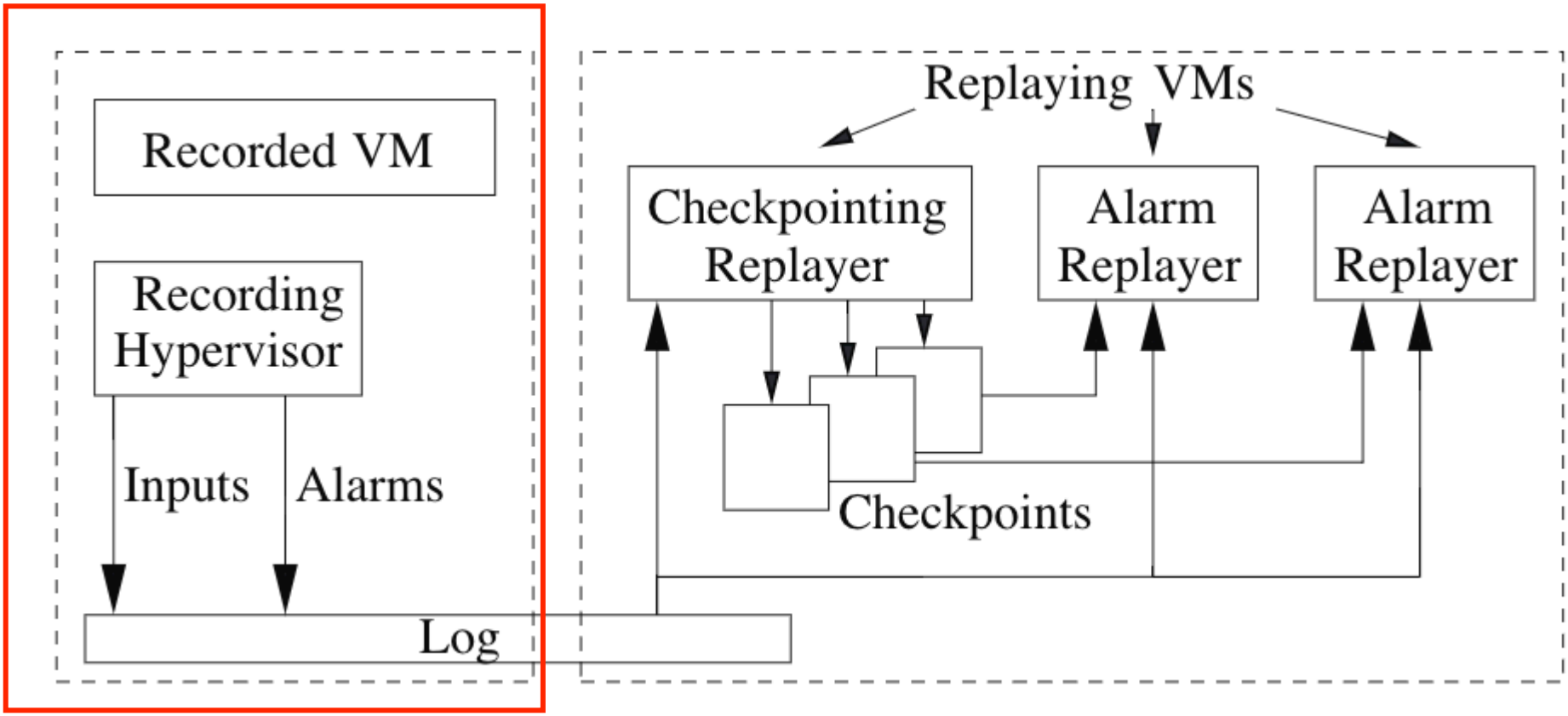

i-acoma group

ILLINOIS
UNIVERSITY OF ILLINOIS AT URBANA-CHAMPAIGN

Contribution: RnR as a Security Framework (RnR-Safe)

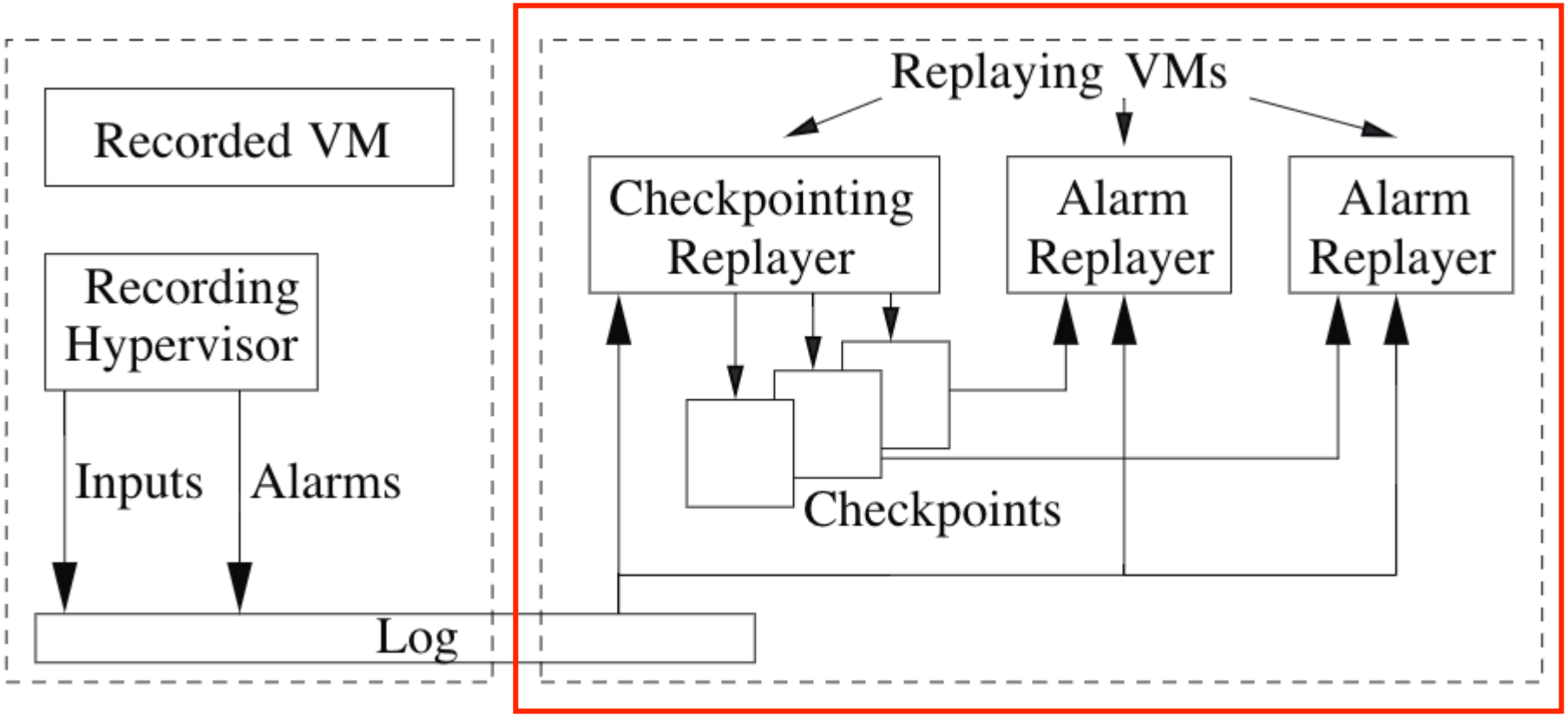

i-acoma group

ILLINOIS
UNIVERSITY OF ILLINOIS AT URBANA-CHAMPAIGN

Summary

- Recorder
  - Records inputs, captures alarms and passes them to replayers
- Checkpointing Replayer
  - Consume log, produce checkpoints, invoke alarm replayers
- Alarm Replayers
  - Replay from recent checkpoint and determine if there was a valid reason for the alarm

i-acoma group

ILLINOIS
UNIVERSITY OF ILLINOIS AT URBANA-CHAMPAIGN

Using RnR-Safe

How to Use RnR-Safe

Attack	Alarm Trigger	Possible First Detection Technique	Role of Replay
ROP (this paper)	RAS mis-prediction	Manage a multi-threaded RAS, use a whitelist	Execute a kernel-compatible shadow stack algorithm
Jump Oriented Program-ming (JOP)	Stray indirect branch or call	Table of begin and end addresses of the most common functions	Verify if the target is one of the less common functions
Denial of Service (DOS)	Kernel scheduler inactivity	Counter of number of context switches	Identify reason for low switching frequency

Table 1: Examples of potential RnR-Safe uses.

i-acoma group

ILLINOIS
UNIVERSITY OF ILLINOIS AT URBANA-CHAMPAIGN

Summary: How to Use RnR-Safe

1. Design a reliable **alarm trigger (HW or SW)**
   - Guarantee that an attack will trip the alarm
2. Define an accurate replay SW analysis
   - Replay must perfectly discriminate between false alarms and true intrusions
3. Minimize false alarm rate by enhancing trigger

i-acoma group

ILLINOIS
UNIVERSITY OF ILLINOIS AT URBANA-CHAMPAIGN

Using RnR-Safe to Prevent ROP Attacks

RAS, Our Alarm Trigger

Return Address Stack (RAS)

- Used to predict the target of return instructions

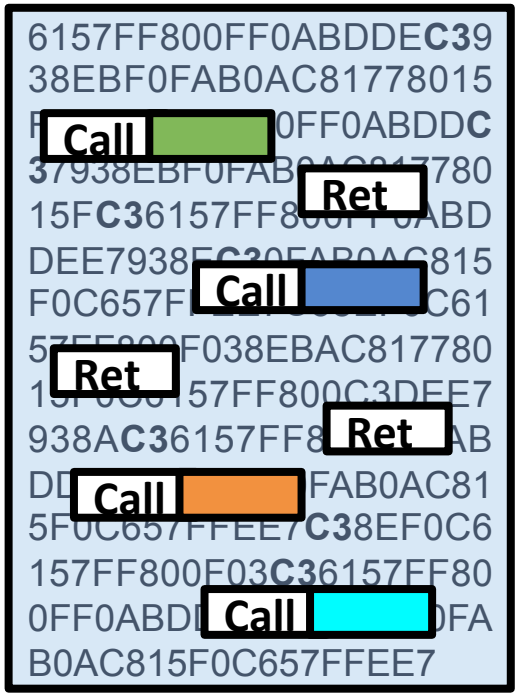

One more RET?

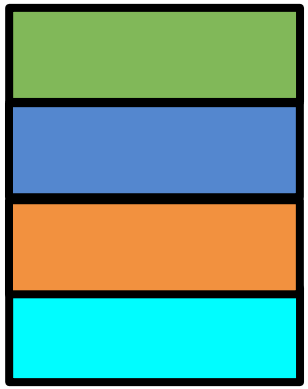

Using the RAS to Detect ROPs

- The RAS mis-prediction is valid detector ROPs
  - If a ROP attack occurs, at least one of the returns will mis-predict

i-acoma group

ILLINOIS
UNIVERSITY OF ILLINOIS AT URBANA-CHAMPAIGN

Using the RAS to Detect ROPs

- The RAS mis-prediction is valid detector ROPs
  - If a ROP attack occurs, at least one of the returns will mis-predict
- **Challenge:** Not every misprediction is a ROP attack
  - Underflow
  - Multi-Threading
  - Non-Procedural Returns
  - Imperfect Nesting

i-acoma group

ILLINOIS
UNIVERSITY OF ILLINOIS AT URBANA-CHAMPAIGN

Reducing False Alarms

Again, in context of RAS based ROP detection

Problem: Supporting a Multi-Threaded Environment

- As threads are de-scheduled the RAS entries are left behind
  - Will lead to mis-predictions (false alarms)
- **Solution:** Spill the RAS to hyper-visor memory
  - Hyper-visor can introspect OS to determine thread-id of upcoming thread
  - RAS can be swapped during VM exits and re-entries

i-acoma group

ILLINOIS
UNIVERSITY OF ILLINOIS AT URBANA-CHAMPAIGN

Structures Used to Support Multiple Threads

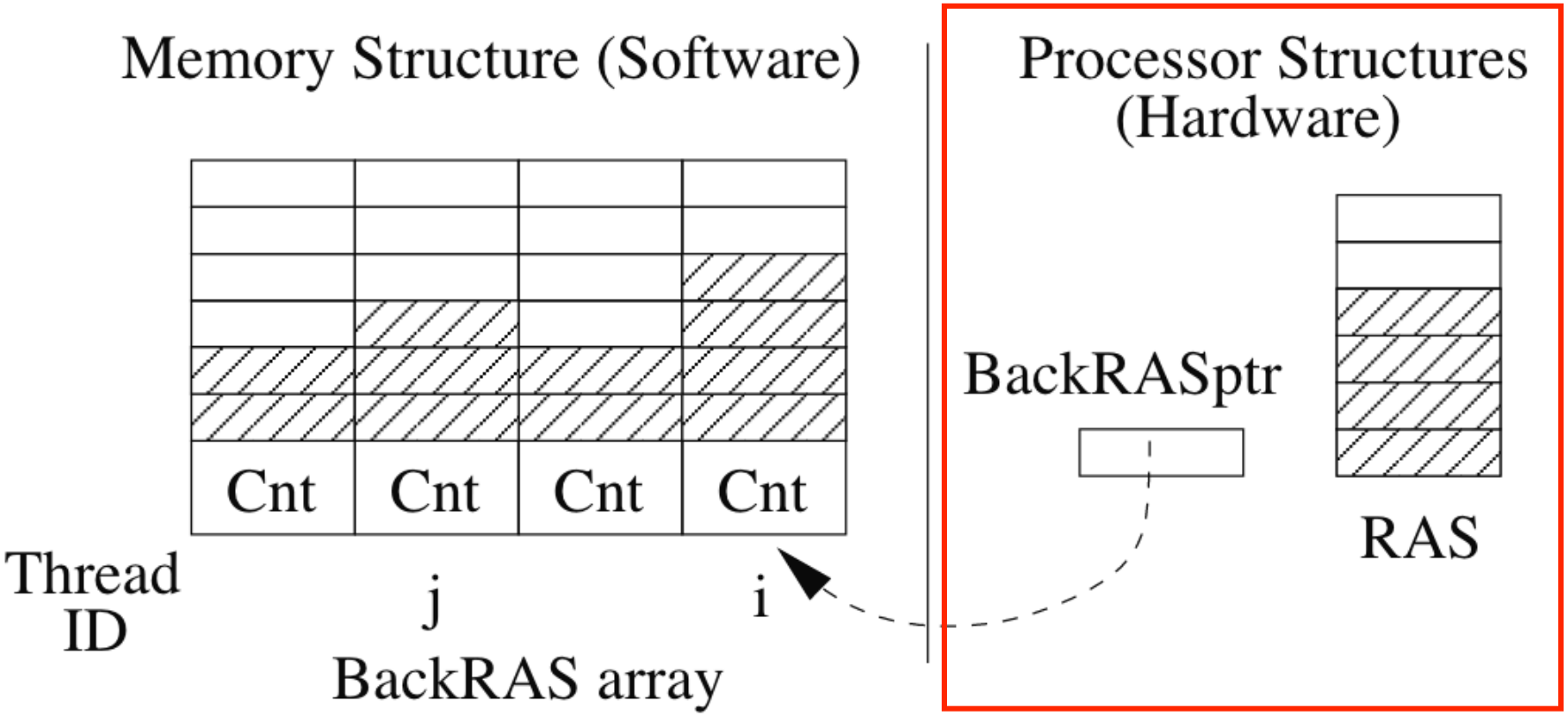

i-acoma group

ILLINOIS
UNIVERSITY OF ILLINOIS AT URBANA-CHAMPAIGN

Problem: Supporting Non-Procedural Returns

- Legal for SW to use push+ret instructions to branch
- We only found one source of this
  - Within the kernel scheduling code
  - Only three possible destinations
- **Solution:** White-list all valid (src, dst)
  - Challenge with white-list is potential for bypass
  - So we specifically white-list the 3 possible (src,dst) pairs

i-acoma group

ILLINOIS
UNIVERSITY OF ILLINOIS AT URBANA-CHAMPAIGN

Problem: RAS Underflow and Imperfect Nesting

- For underflow, imperfect nesting:
  - **Solution:** Leave to the alarm replayer
- It is possible for checkpoint-replay to suppress alarms
  - Log the underflows into Eviction Records
  - Requires VMExit on underflow
  - The checkpoint replayer can suppress any alarms from underflows with valid eviction records

i-acoma group

ILLINOIS
UNIVERSITY OF ILLINOIS AT URBANA-CHAMPAIGN

Performance Discussion

Experimental Evaluation

- Goal of the evaluation:
  - Assess the overhead of recording
  - Assess the overhead of replay on a different machine
  - Determine if false-alarm frequency can be reasonably contained

i-acoma group

ILLINOIS
UNIVERSITY OF ILLINOIS AT URBANA-CHAMPAIGN

Recording Overhead

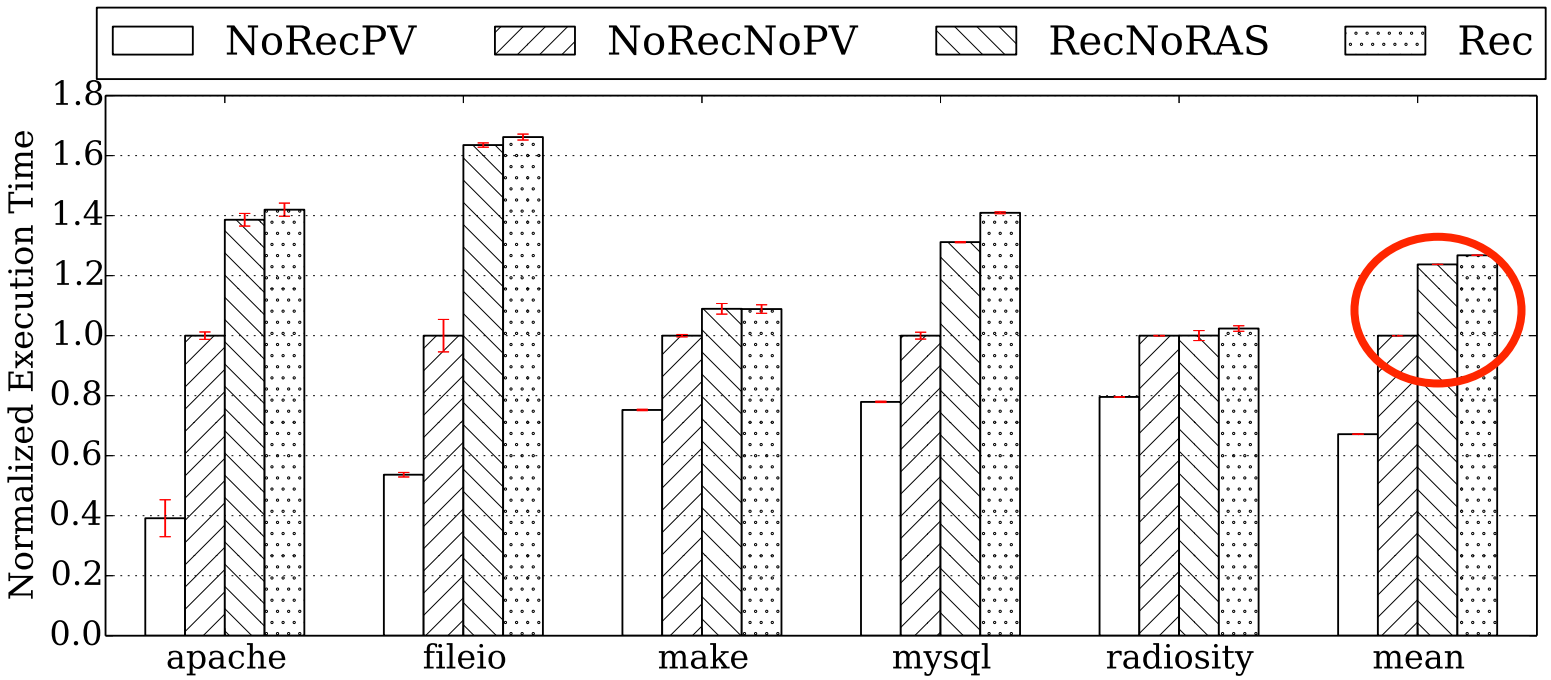

- Recording adds on average only 27%

i-acoma group

ILLINOIS
UNIVERSITY OF ILLINOIS AT URBANA-CHAMPAIGN

Replay Overhead

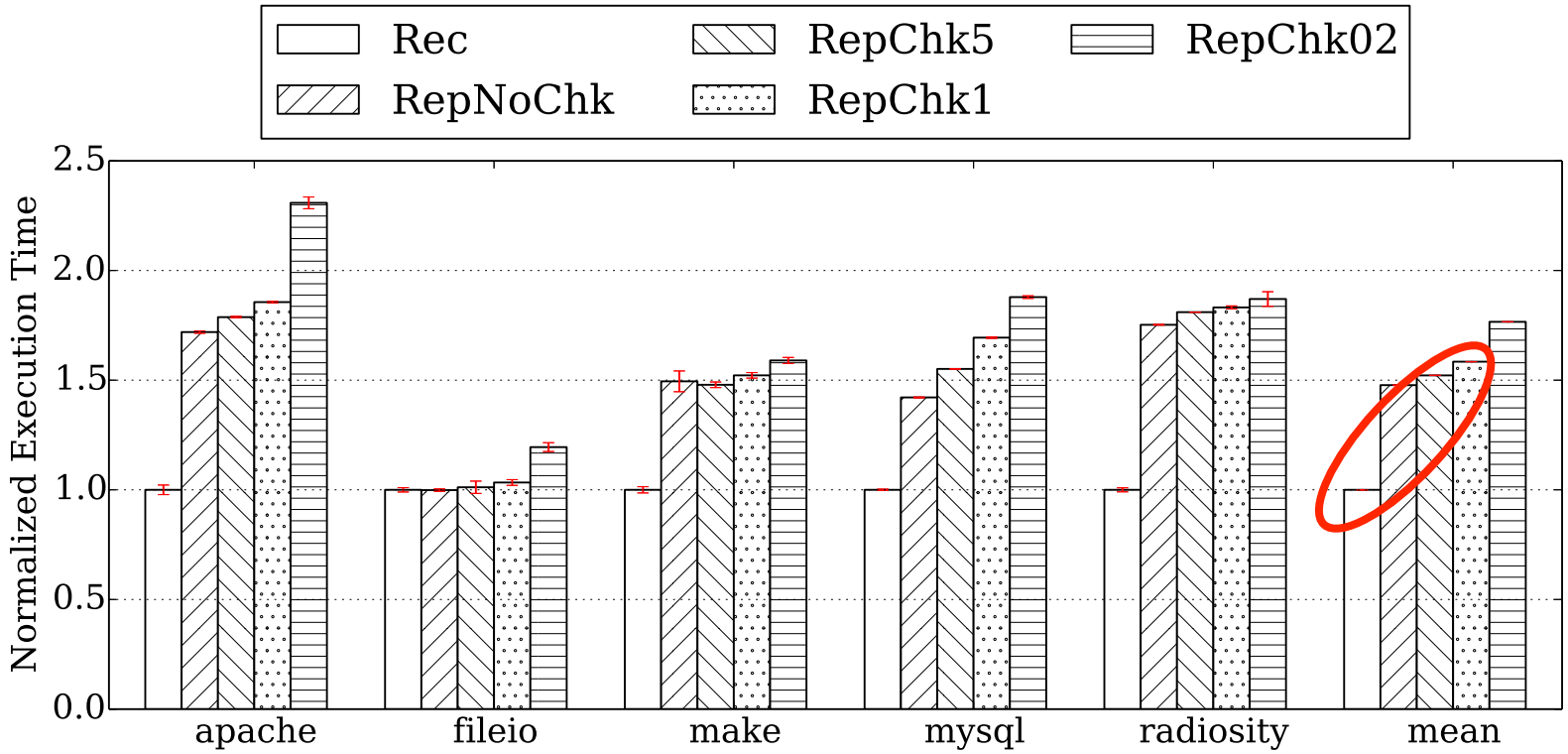

- Checkpoint replayer has comparable execution speed to the recorded

i-acoma group

ILLINOIS
UNIVERSITY OF ILLINOIS AT URBANA-CHAMPAIGN

Most Kernel False Alarms Suppressed

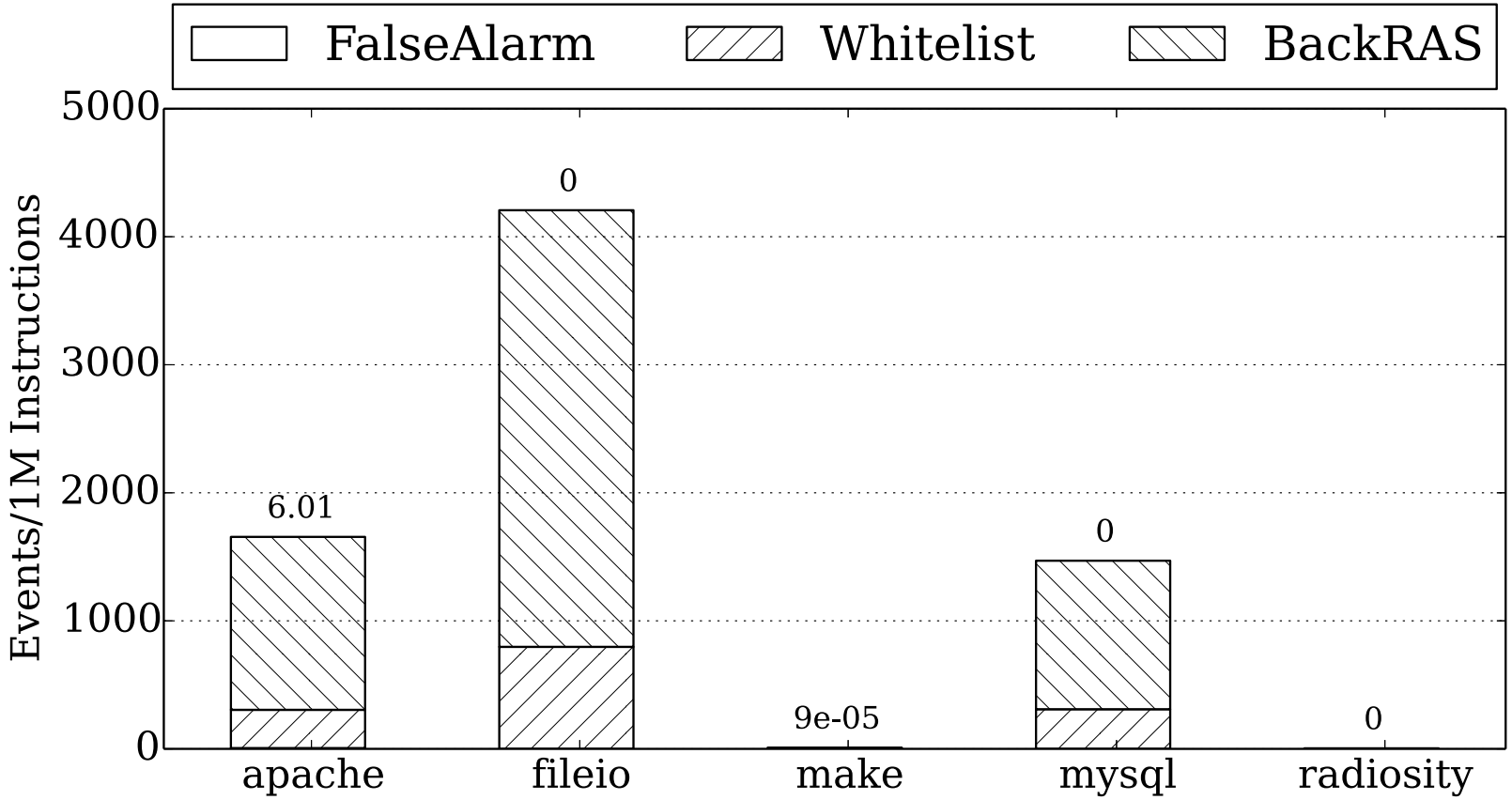

- Practically no false alarms for the replay to handle

i-acoma group

ILLINOIS
UNIVERSITY OF ILLINOIS AT URBANA-CHAMPAIGN

Alarm Replayer Execution Time

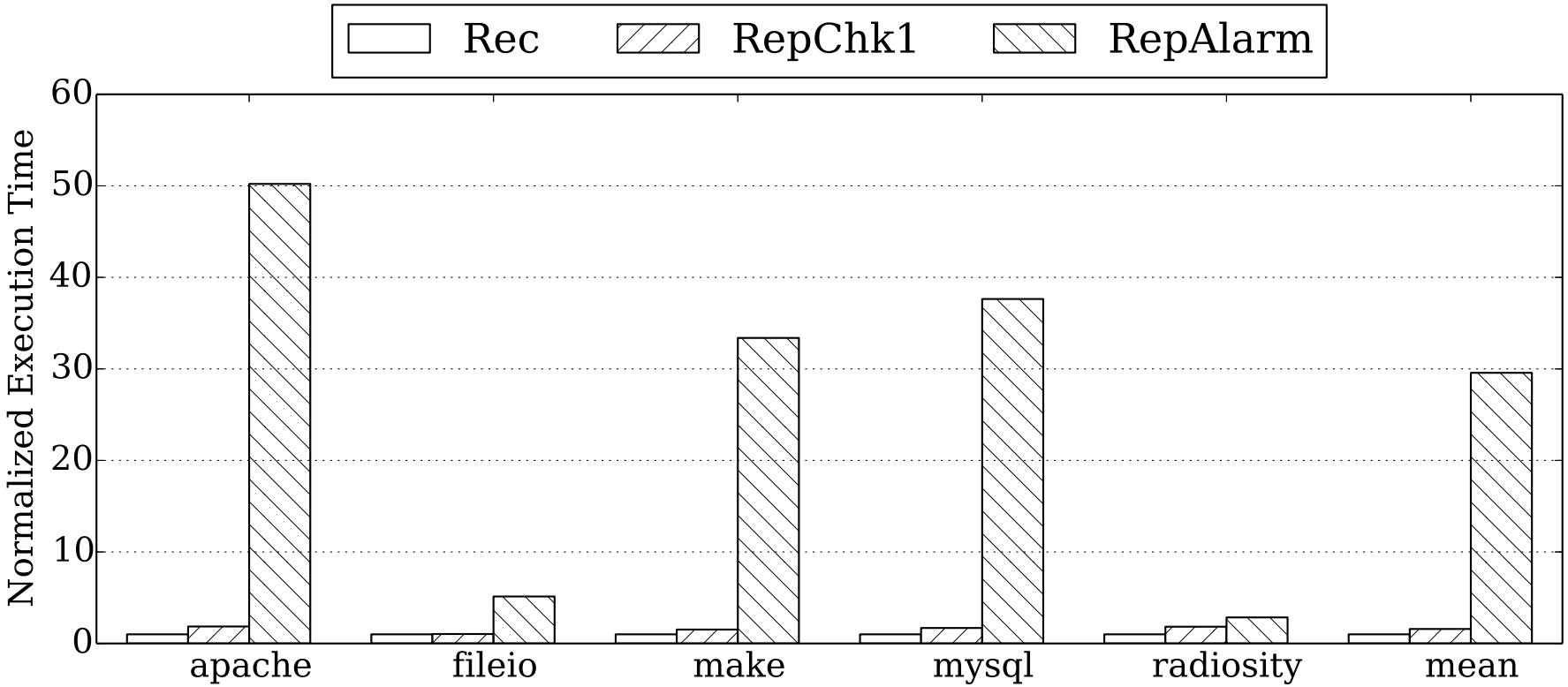

- Alarm replayer is expensive, but rarely invoked

i-acoma group

ILLINOIS
UNIVERSITY OF ILLINOIS AT URBANA-CHAMPAIGN

Conclusions

- RnR-Safe is a framework where RnR is used to complement HW security features
- Alarm Replay gives security features breathing room
  - Can suffer false-positives and still be useful
  - Can trade complexity for imprecision
- Checkpointing replayer has comparable execution speed to the recorder (thus, can replay all the time)
- Alarm replayer has to handle few false positives

i-acoma group

ILLINOIS
UNIVERSITY OF ILLINOIS AT URBANA-CHAMPAIGN

Thank you! Questions?

Recording Overhead

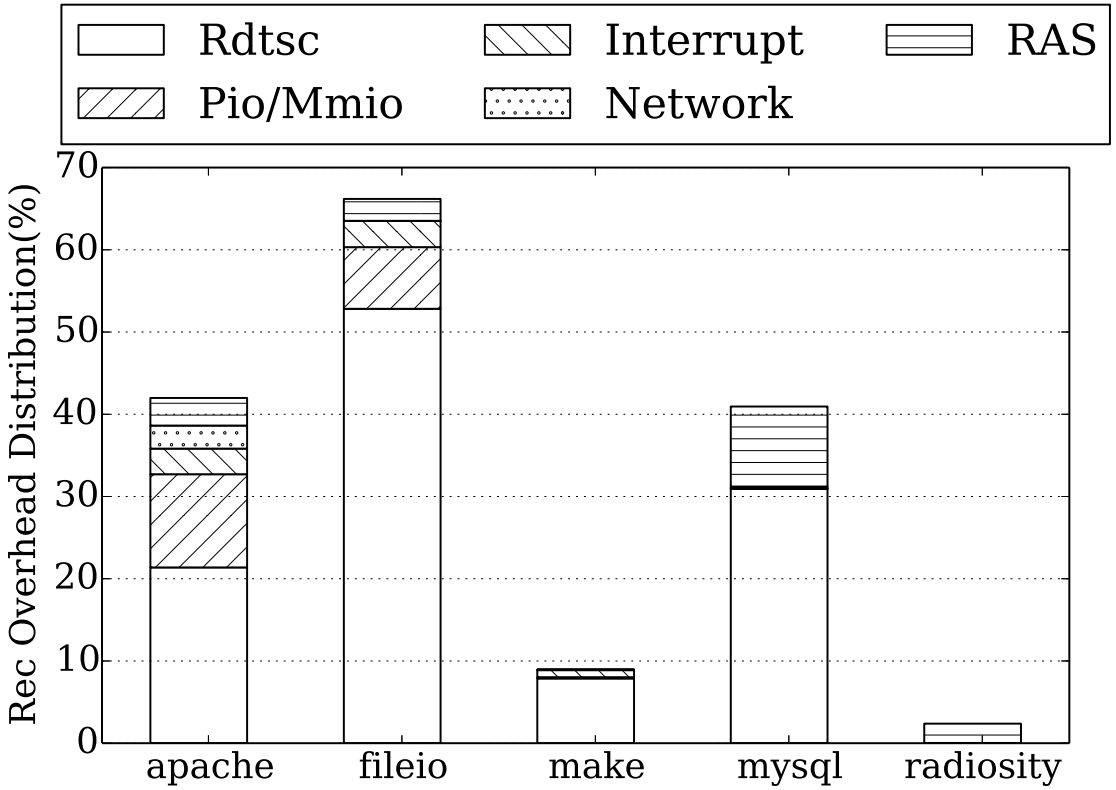

i-acoma group

ILLINOIS
UNIVERSITY OF ILLINOIS AT URBANA-CHAMPAIGN

Replay Overhead

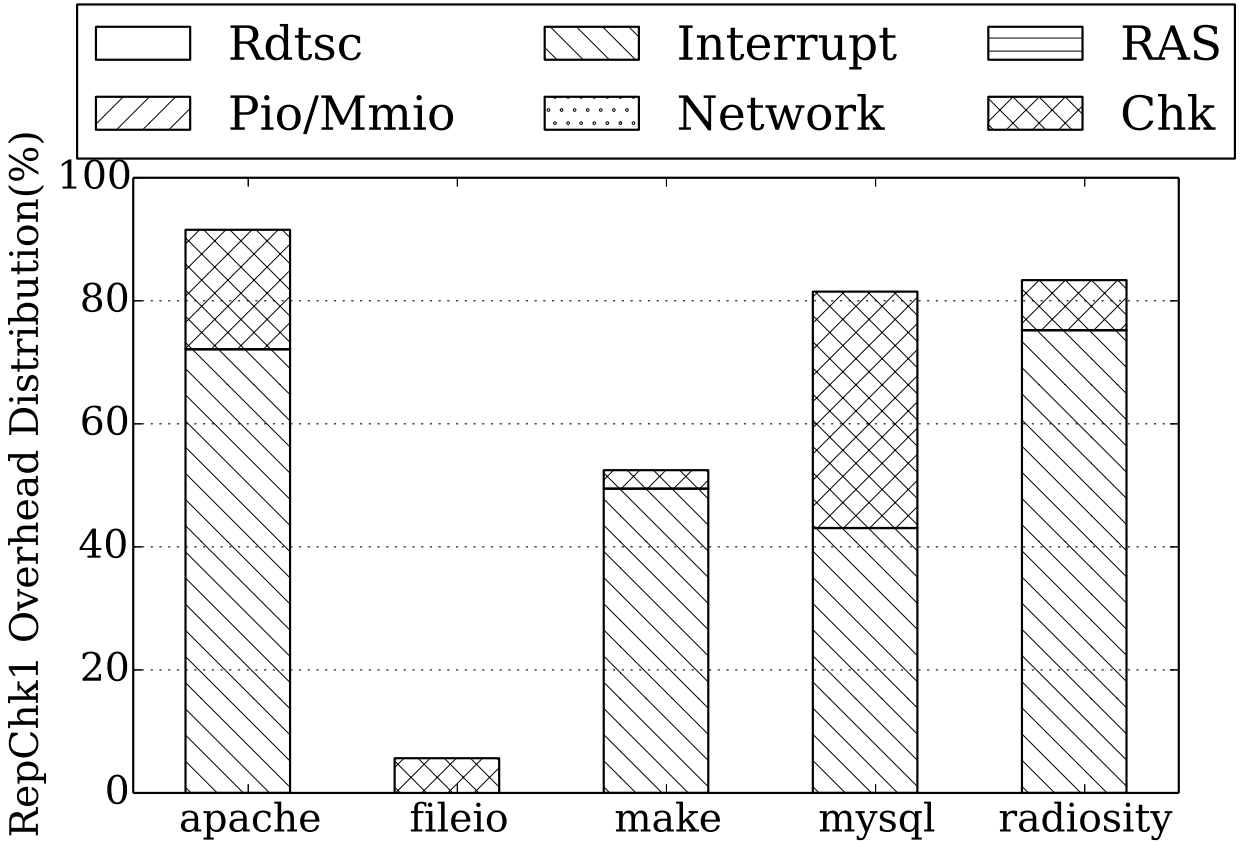

i-acoma group

ILLINOIS
UNIVERSITY OF ILLINOIS AT URBANA-CHAMPAIGN

Alarm Replayer

- Alarm replays are invoked by the checkpoint replayer as alarms are encountered
- The alarm replayer needs to perform analysis such that
  - RAS underflows detected
  - Imperfect nesting detected
- Starts from most recent checkpoint

i-acoma group

ILLINOIS
UNIVERSITY OF ILLINOIS AT URBANA-CHAMPAIGN